SONOFF

DIY S-MATE

Quick Guide V1.1

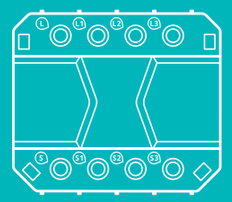

Switch Mate

CN > EN > DE > ES > FR > IT > RU > PT

1

取出电池绝缘片

Pull out the battery insulation sheet

Ziehen Sie die Batterieisolierungsfolie heraus

Extraiga la lámina aislante de la batería

Retirez la feuille d'isolation de la batterie

Togliere il rivestimento isolante della batteria

Извлеките изоляционный лист аккумулятора

Retire a plástico de isolamento da bateria

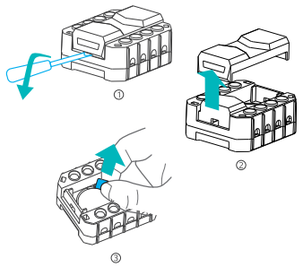

2

断 电

Power off

Ausschalten

Apagado

Éteindre

Spegnimento

Выключить

Desligar

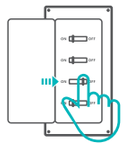

设备安装、故障维修请由专业资质电工操作。切勿在设备通电时进行接线操作或触碰到接线端子，以免发生触电危险！

Please install and maintain the device by a professional electrician. To avoid electric shock hazard, do not operate any connection or contact the terminal connector while the device is powered on!

Lassen Sie die Installation und Wartung des Geräts von einem professionellen Elektriker durchführen. Um die Gefahr eines Stromschlags zu vermeiden, dürfen Sie nach dem Anschließen an das Stromnetz keinen Anschluss betätigen und den Anschlussstecker nicht berühren!

Deje que un electricista profesional realice la instalación y el mantenimiento del dispositivo. No active ninguna conexión, ni entre en contacto con el conector terminal, después de conectarlo, para prevenir descargas eléctricas!

Veuillez faire installer et entretenir l'appareil par un électricien professionnel. Pour éviter tout risque d'électrocution, n'actionnez aucune connexion et n'entrez pas en contact avec le connecteur de la borne après l'avoir branchée!

Rivolgersi a un elettricista professionista per l'installazione e la manutenzione del dispositivo. Per evitare il rischio di scosse elettriche, non alimentare alcuna connessione o il connettore del terminale dopo il collegamento!

Установку и обслуживание устройства следует предоставить профессиональным электрикам. Во избежание поражения электрическим током не работайте с какими-либо соединениями и не прикасайтесь к клеммному соединителю после подключения!

Por favor, instale e faça a manutenção do dispositivo por um eletricista profissional. Para evitar o risco de choque elétrico, não opere nenhuma conexão ou entre em contato com o conector do terminal após conectar.

3

接 线

Wiring instruction

Verkabelungsanleitung

Instrucciones de cableado

Instructions de câblage

Istruzioni per il cablaggio

Инструкции по проводке

Instruções de instalação

S-MATE 搭配一台 MINIR3 接线示意：

The wiring instruction of connecting the S-MATE with one MINIR3:

Die Verkabelungsanleitung für den Anschluss des S-MATE an einem MINIR3:

Instrucción del cableado para conectar el S-MATE con un MINIR3:

Les instructions de câblage pour connecter le S-MATE avec un MINIR3 :

Istruzioni di cablaggio per il collegamento di S-MATE con un MINIR3:

Инструкция по подключению S-MATE к одному MINIR3:

A instrução de fiação para conectar o S-MATE com um MINIR3:

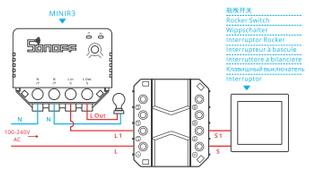

S-MATE 搭配三台 MINIR3 接线示意：

The wiring instruction of connecting the S-MATE with three MINIR3:

Die Verkabelungsanleitung für den Anschluss des S-MATE mit drei MINIR3:

Instrucción del cableado para conectar el S-MATE con tres MINIR3:

Les instructions de câblage pour connecter le S-MATE avec trois MINIR3 :

Istruzioni di cablaggio per il collegamento di S-MATE con tre MINIR3:

Инструкция по подключению S-MATE с тремя MINIR3:

A instrução de fiação para conectar o S-MATE com três MINIR3:

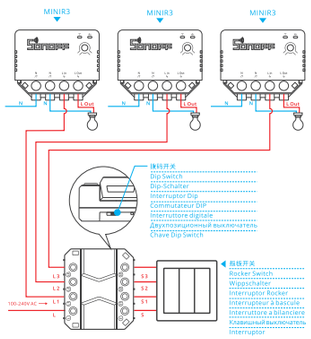

S-MATE 四个端子 (L/L1/L2/L3) 为连通的接线端子，接入 MINIR3 的火线 L 不一定需要从 S-MATE 引出。

There are L/L1/L2/L3 on the S-MATE which can be used as terminal connectors, but you have options to directly connect the L wire of MINIR3 to the L wire in the switching box without going through the S-MATE.

An der S-MATE befinden sich die Anschlüsse L/L1/L2/L3, die als Anschlussklemmen verwendet werden können. Sie haben jedoch auch die Möglichkeit, das L-Kabel der MINIR3 direkt mit dem L-Kabel in der Schaltbox zu verbinden, ohne die S-MATE durchzuqueren.

En el interruptor S-MATE existen los L/L1/L2/L3 que pueden ser utilizados como conectores terminales, también puedes conectar directamente el cable L del MINIR3 al cable L en la caja de conmutación sin utilizar el S-MATE.

Il y a des L/L1/L2/L3 sur le S-MATE qui peuvent être utilisés comme connecteurs de bornes, mais vous avez la possibilité de connecter directement le fil L du MINIR3 au fil L de la boîte de commutation sans passer par le S-MATE.

L/L1/L2/L3 sull'S-MATE possono essere usati come terminali di connessione, ma esiste la possibilità di collegare direttamente il cavo L di MINIR3 al cavo L della scatola di commutazione senza passare attraverso l'S-MATE.

На S-MATE есть L/L1/L2/L3, которые могут быть использованы в качестве клеммных соединителей, однако у Вас есть возможность подключить L-провод MINIR3 напрямую к L-проводу в коммутационной коробке без прохождения через S-MATE.

Existem L / L1 / L2 / L3 no S-MATE que podem ser usados como conectores de terminal, mas você tem opções para conectar diretamente o fio L do MINIR3 ao fio L na caixa de comutação sem passar pelo S-MATE.

LIKE IT!

Glad to know you are satisfied with SONOFF products.
It would mean a lot to us if you can take a minute to share your buying experience.

Share it on Amazon

Share it on your social media

Share it with your friends and family

Get the latest news by following us:

New arrival
Promotion
How-to videos

HAVE A PROBLEM?

We are so sorry for the inconvenience caused by the product.
Please contact us for help via the email address below.

support@itead.cc

We will get back to you as soon as possible.

YouTube

facebook

拨码开关出厂默认在右边，如设备接自回弹开关使用，请将拨码开关拨到左边。

The dip switch is factory set to the right. Please toggle the dip switch to the left if connection a pulse switch to the device.

Der Dip-Schalter ist werkseitig nach rechts eingestellt. Bitte schalten Sie den Dip-Schalter nach links, wenn Sie einen Impulsschalter an das Gerät anschließen.

El interruptor DIP se encuentra en la derecha. Cambie el interruptor DIP a la izquierda si conecta un interruptor de pulso al dispositivo.

Le commutateur DIP est réglé en usine sur la droite. Veuillez basculer le commutateur DIP vers la gauche si vous connectez un commutateur à impulsion à l'appareil.

L'interruttore digitale è pre-impostato sulla destra. Se si collega un interruttore a impulsi al dispositivo, spostare a sinistra l'interruttore digitale.

На заводе-изготовителе двухпозиционный выключатель установлен вправо. Если к устройству подключен импульсный выключатель, переведите двухпозиционный выключатель влево.

O interruptor dip vem configurado de fábrica para a direita. Alterne o interruptor dip para a esquerda se estiver conectando um interruptor de pulso ao dispositivo.

确保零火线接入无误。

Make sure the neutral wire and live wire connection is correct.

Vergewissern Sie sich, dass der Anschluss von Neutralleiter und stromführender Phase korrekt sind.

Compruebe que las conexiones del cable neutro y activo sean correctas.

Assurez-vous que le fil neutre et le fil sous tension sont correctement installés.

Assicurarsi che il collegamento del cavo di neutro e del cavo di fase sia corretto.

Убедитесь, что провод нейтрали (ноль) и провод под напряжением (фаза) подключены.

Certifique-se de que os cabos neutro e fase estejam conectados corretamente.

添加至轻智能网关

Add to eWeLink-Remote Gateway

Zum eWeLink-Remote-Gateway hinzufügen

Añadir a la pasarela eWeLink-Remote

Ajouter à la passerelle eWeLink-Remote

Aggiungere a Gateway eWeLink-Remote

Добавить к шлюзу eWeLink-Remote

Adicionar ao eWeLink-Remote Gateway

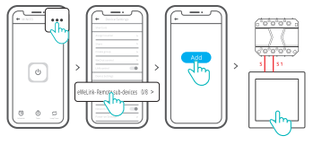

① 在带有轻智能网关的系列产品例如 MINIR3，SwitchMan 的设置页面中添加 S-MATE.
② 在智能场景中，设置联动使用.

① You are allowed to add S-MATE to the devices that have eWeLink-Remote gateway such as MINIR3, SwitchMan and etc. on their setting page.
② Add S-MATE on Smart Scene to trigger other devices.

① Sie können S-MATE zu den Geräten hinzufügen, die über ein eWeLink-Remote-Gateway verfügen, wie z. B. MINIR3, SwitchMan, usw., auf deren jeweiligen Einstellungsseite.
② Fügen Sie S-MATE zu Smart Scene hinzu, um andere Geräte zu aktivieren.

① Se le permite añadir S-MATE a los dispositivos que dispongan de la pasarela eWeLink-Remote como MINIR3, SwitchMan y etc. en su página de configuración.
② Añada S-MATE a Smart Scene para activar otros dispositivos.

① Vous êtes autorisé à ajouter S-MATE aux appareils dotés d'une passerelle eWeLink-Remote tels que MINIR3, SwitchMan, etc. sur leur page de configuration.
② Ajoutez S-MATE à Smart Scene pour déclencher d'autres appareils.

① Si può aggiungere S-MATE ai dispositivi che hanno un gateway eWeLink-Remote come MINIR3, SwitchMan ecc. nella loro pagina di impostazione.
② Aggiungere S-MATE su Smart Scene per attivare altri dispositivi.

① Вы можете добавить S-MATE к устройствам со шлюзом eWeLink-Remote, например, MINIR3, SwitchMan и т. д., на их странице настроек.
② Добавить S-MATE в Умную сцену для активации других устройств.

① Entre na página de configuração do MINIR3, clique em sub-dispositivos eWeLink-Remote no aplicativo e acione o sub-dispositivo pressionando o botão no dispositivo, então ele será adicionado com sucesso.
② Adicione S-MATE no Smart Scene para acionar outros dispositivos.

User Manual

https://sonoff.tech/usermanuals

扫码或输入网址查看产品详细的说明书和帮助。

Scan the QR code or visit the website to learn about the detailed user manual and help.

Scannen Sie den QR-Code oder besuchen Sie die Website um auf die detaillierte Bedienungsanleitung zuzugreifen und hilfe.

Escanee el código QR o visite el sitio web para consultar la guía del usuario detallada y ayuda.

Scannez le code QR ou visitez le site web pour consulter le guide détaillé et aide.

Scansionare il codice QR o visita il sito web per consultare la guida utente dettagliata e aiuto.

Сканируйте этот QR-код или перейдите на наш веб-сайт для просмотра подробного руководство пользователя и помощи.

Scaneie o código QR ou visite o nosso website para consultar detalhadamente o guia do usuário e ajuda.

FCC Warning

Changes or modifications not expressly approved by the party responsible for compliance could avoid the user's authority to operate the equipment.

This device complies with part 15 of the FCC Rules. Operation is subject to the following two conditions: (1) This device may not cause harmful interference, and (2) this device must accept any interference received, including interference that may cause undesired operation.

FCC Radiation Exposure Statement:

This equipment complies with FCC radiation exposure limits set forth for an uncontrolled environment. This equipment should be installed and operated with minimum distance 20cm between the radiator & your body. This transmitter must not be co-located or operating in conjunction with any other antenna or transmitter.

Note: This equipment has been tested and found to comply with the limits for a Class B digital device, pursuant to part 15 of the FCC Rules. These limits are designed to provide reasonable protection against harmful interference in a residential installation. This equipment generates, uses and can radiate radio frequency energy and, if not installed and used in accordance with the instructions, may cause harmful interference to radio communications. However, there is no guarantee that interference will not occur in a particular installation. If this equipment does cause harmfulinterference to radio or television reception, which can be determined by turning the equipment off and on, the user is encouraged to try to correct the interference by one or more of the following measures:

— Reorient or relocate the receiving antenna.
— Increase the separation between the equipment and receiver.
— Connect the equipment into an outlet on a circuit different from that to which the receiver is connected.
— Consult the dealer or an experienced radio/TV technician for help.

Hereby, Shenzhen Sonoff Technologies Co., Ltd. declares that the radio equipment type S-MATE is in compliance with Directive 2014/53/EU.The full text of the EU declaration of conformity is available at the following internet address:

https://sonoff.tech/usermanuals

SONOFF

Shenzhen Sonoff Technologies Co., Ltd.
1001, BLDG8, Lianhua Industrial Park, shenzhen, GD, China
ZIP code: 518000 Website: sonoff.tech

MADE IN CHINA

品牌	松诺/SONOFF
物料	S-MATE 快速指南 V1.1
材料	105g铜板 四色印刷 手风琴7折页
尺寸	展开：336x80mm 折后：48x80mm
日期	2021.11.02